Modell-Nr. DVP180 AKKU-VAKUUMPUMPE 18V

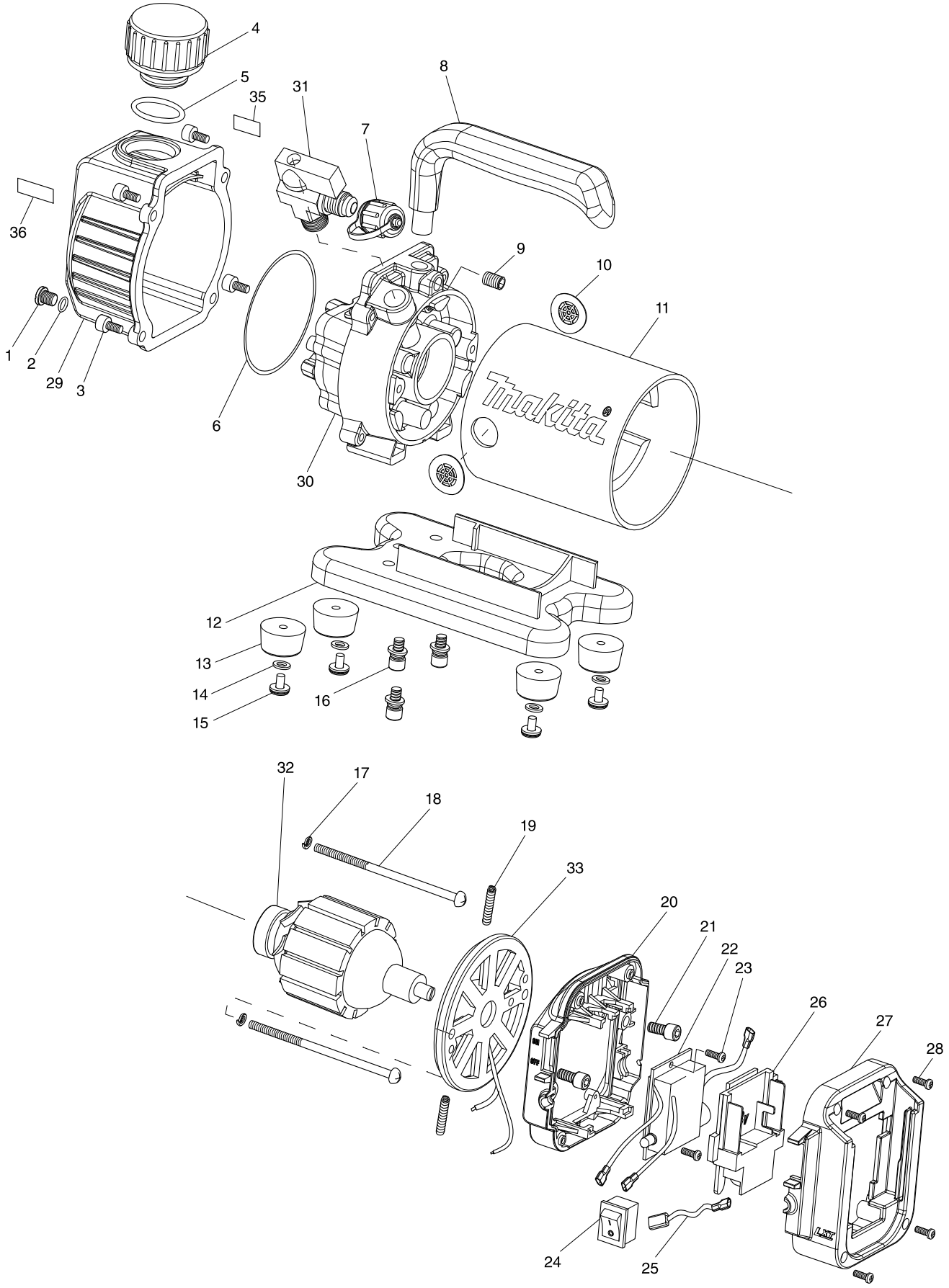

Modell-Nr. DVP180 AKKU-VAKUUMPUMPE 18V

Position	Artikel-Nr.	Beschreibung	I/C	Stk.	N/O	Opt. 1	Opt. 2	Hinweis
001	AS000VP009	DRAIN PLUG M8X12		1				
002	AS000VP010	O-RING 10X2.5		1				
003	AS000VP011	HEXAGON BOLT M5X16		4				
004	AS000VP012	OIL FILL/EXHAUST CAP		1				
005	AS000VP013	O-RING 26X2.2		1				
006	AS000VP014	O-RING 95X3.1		1				
007	AS000VP017	INLET PORT CAP (5/16")		1				
008	AS000VP018	HANDLE		1				
009	AS000VP019	HEXAGON BOLT M5X8		1				
010	AS000VP020	INLET PORT CAP		2				
011	AS00VP021M	MOTOR HOUSING		1				
012	AS000VP022	BASE		1				
013	AS000VP023	RUBBER BASE		4				
014	AS000VP024	WASHER 4.5X12X1.0		4				
015	AS000VP025	TAPPING SCREW M4X1		4				
016	AS000VP026	HEXAGON BOLT (W/WAHSER) M5X16		3				
017	AS000VP027	SPRING WASHER M5		2				
018	AS000VP028	PAN HEAD SCREW M5X100		2				
019	AS000VP029	CARBON BRUSH SPRING		2				
020	AS000VP030	BATTERY HOLDER (FRONT)		1				
021	AS000VP033	HEXAGON BOLT M5X10		2	*			
021-1	AS000VP066	HEXAGON BOLT M5X12	<	2				
022	AS000VP034	CIRCUIT BOARD		1				
023	AS000VP035	TAPPING SCREW M3X10		2				
024	AS000VP036	POWER SWITCH		1				
025	AS000VP037	LEAD WIRE		1				
026	643899-6	KONTAKTEINHEIT BCV02		1				
027	AS00VP039K	BATTERY HOLDER (REAR)		1				
028	AS000VP035	TAPPING SCREW M3X10		4				
029	AS0VP008MK	OIL TANK ASS'Y		1				
030	AS00VP015M	PUMP ASS'Y		1				
031	AS000VP016	INTAKE SHUT-OFF VALVE		1				
032	AS000VP031	ARMATURE		1				
033	AS000VP032	MOTOR COVER (REAR)		1				
C10	AS00VP071E	WIRE KIT & BRUSH/NOISE FILTER		1				
035	AS00SS0306	CAUTION LABEL (OIL)		1				
036	AS00SS0305	CAUTION LABEL (HEAT)		1				
A02	AS0Y06110K	ADAPTER		1				
A03	AS00XP808M	VACUUM GAUGE		1				
A04	AS000AI158	HOSE PACKING (6 PCS)		1				

Please order the parts with a part number.

Print Date 31/07/2019