M18CCS55-0 BTY CIRCULAR SAW XXX

4933446223 - M18CCS55-0 - 4000446224

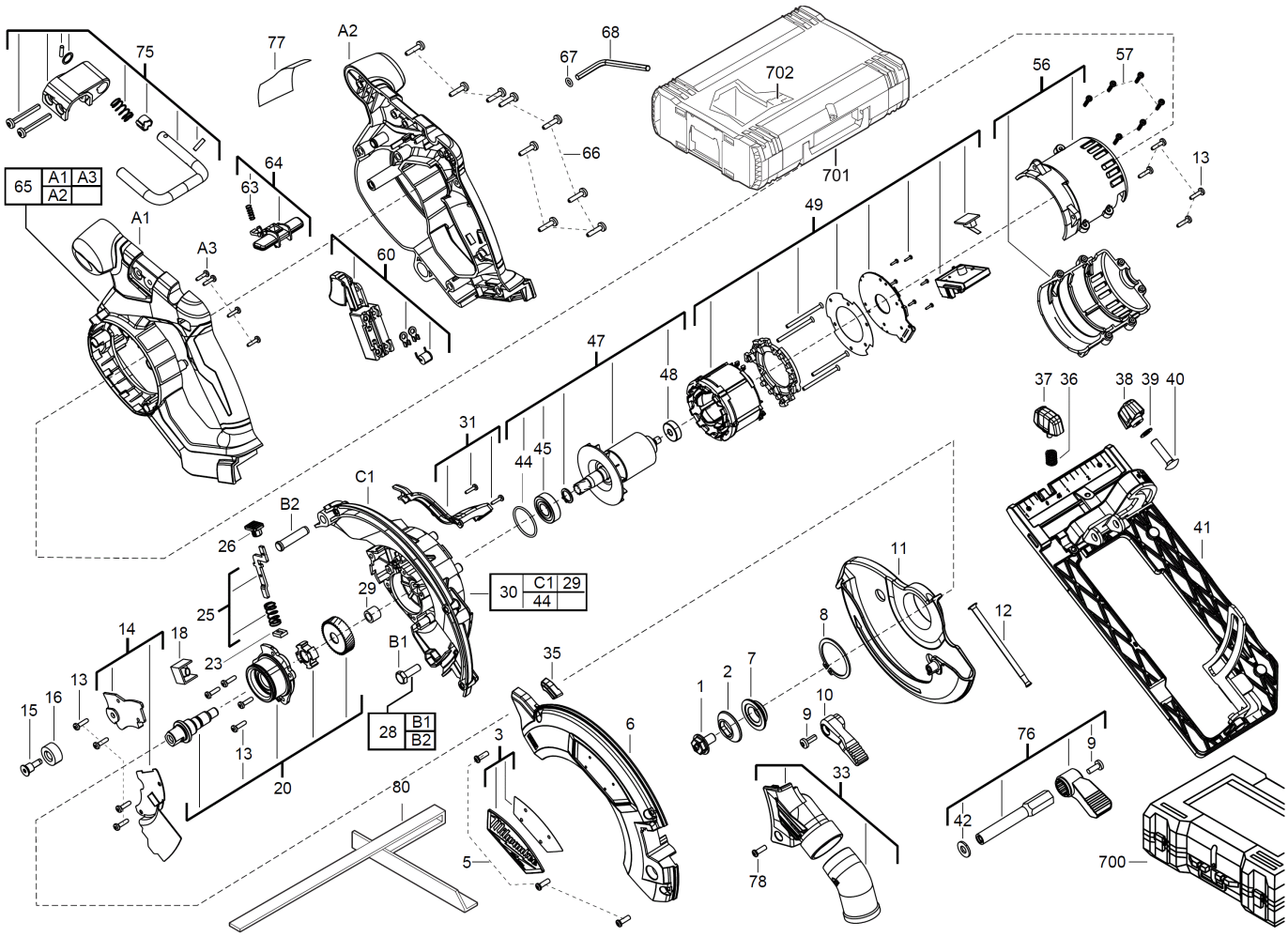

75
77
A2
68
67
702
56
57
13
66
701
64
63
65
A1
A3
A2
A1
A3
60
49
47
48
37
36
38
39
40
31
44
45
C1
B2
26
41
11
30
C1
29
44
29
25
8
12
14
18
23
B1
35
1
2
7
13
16
15
10
9
28
B1
B2
6
76
9
3
13
20
80
33
42
5
78
700

Position	Quantity	Description	Part number	EAN
0001	1	SCREW	06751010	4058546068653
0002	1	FLANGE	43340795	4058546073404
0003	1	NAME PLATE	4931436100	4002395880089
0005	3	SCREW	4931435150	4002395859948
0006	1	HOUSING	4931436101	4002395880096
0007	1	FLANGE	43340790	4058546073398
0008	1	THRUST COLLAR	34600860	4058546072247
0009	2	SCREW TORX SCREW	06825314	4002395851935
0010	1	LEVER	4931436102	4002395880706
0011	1	SAW PROTECTION	4931436103	4002395880713
0012	1	SPRING	40500045	4058546072674
0013	12	SCREW	06825285	4058546068844
0014	1	RETAINING PLATE	4931436104	4002395880720
0015	1	SCREW	45040485	4058546074258
0016	1	RUBBER BUFFER	4931465876	4058546239763
0018	1	LAMP	4931436106	4002395880744
0020	1	DRIVING SHAFT	4931436107	4002395880751
0023	1	FELT PACKING	45060720	4058546074364
0025	1	SPINDLE LOCK	4931436108	4002395880768
0026	1	PUSH-BUTTON	42421030	4058546073121
0028	1	BOLT	4931436109	4002395880775
0029	1	NEEDLE BEARING	4931435696	4002395864492
0030	1	SAW PROTECTION	4931448974	4002395258178
0031	1	FAN	4931436110	4002395880782
0033	1	ADAPTER	4931436111	4002395880799
0035	1	PLUG	4931436112	4002395881406
0036	1	SPRING	40500650	4058546072742
0037	1	TRIGGER	4931436113	4002395881413
0038	1	TRIGGER	4931436114	4002395881420
0039	1	WASHER	45881560	4058546074845
0040	1	SCREW	4931436115	4002395881437
0041	1	PROTECTING SHOE	4931436116	4002395881444
0042	1	WASHER	45881545	4058546074821
0044	1	O-RING	4931436466	4002395251742
0045	1	BALL BEARING	4931436117	4002395172191
0047	1	ARMATURE	4931436118	4002395881451
0048	1	BALL BEARING	4931436119	4002395881475
0049	1	ELECTRIC FIELD	4931436120	4002395881482
0056	1	MOTOR HOUSING	4931436121	4002395881499
0057	6	SCREW	660570005	4002395827329
0060	1	SWITCH	4931436122	4002395878703
0063	1	SPRING WASHER	672029001	4002395848683
0064	1	PUSH-BUTTON	4931436123	4002395878710
0065	1	HOUSING	4931436124	4002395878727
0066	10	SCREW	06827470	4002395773367
0067	1	O-RING	34404480	4058546072193
0068	1	KEY	4931436125	4002395878734
0075	1	HOOK	4931436126	4002395878741
0076	1	LEVER	4931436127	4002395878758
0077	1	RATING PLATE	4931436128	4002395878765

Position	Quantité	Désignation	Référence	EAN
0078	1	SCREW	660165011	4002395903702
0080	1	PARALLEL GUIDE	43300100	4002395872091
0700	1	CARRYING CASE	4931447559	4002395882731
0701	1	HD Box 3 - 1pc	4932453386	4002395143634
0702	1	HD Box Insert 16-1pc	4932453858	4002395275687