DOMUS LINE

Domus Line S.r.l.
Via Maestri del Lavoro, 1
I-33080 Porcia (Pordenone)
www.domusline.com

D-POWER

SELV

Type Approved Safety Regular Production Surveillance
TÜVRheinland CERTIFIED
www.tuv.com ID 2000000000

D-POWER 30 W

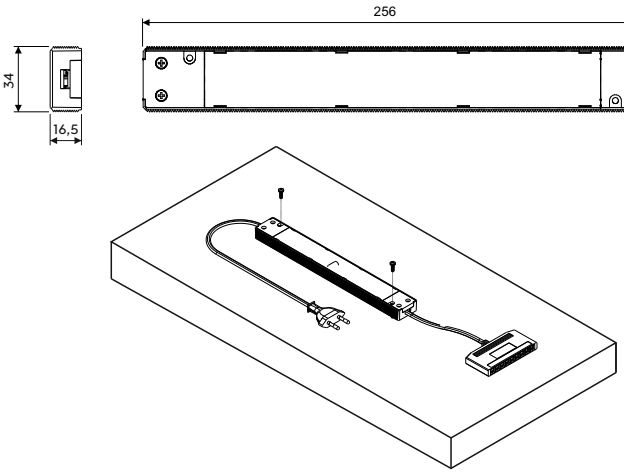

D-POWER 60 W

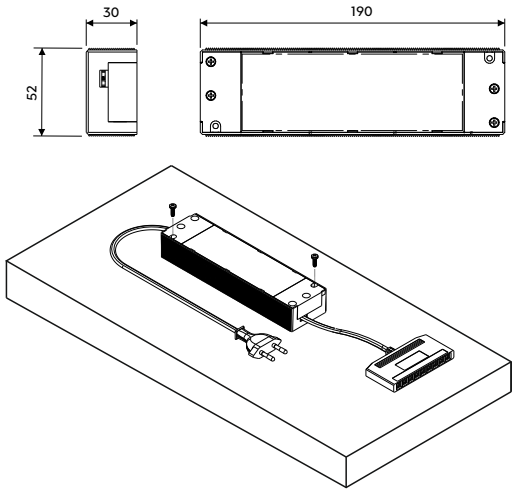

D-POWER 30/12R

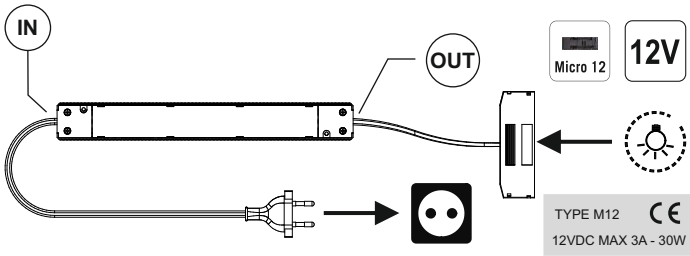

PRI: 220-240Vac, 50/60Hz, 0.16A, cos (φ) 0.95
SEC: 12Vdc, 0-2.5A, 30W max.
ta: -20...+40°C tc: max. 90 °C

D-POWER 30/24D

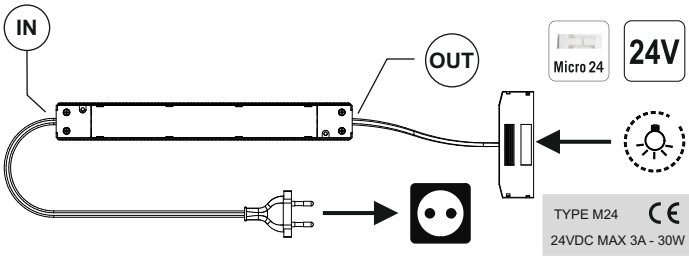

PRI: 220-240Vac, 50/60Hz, 0.16A, cos (φ) 0.95
SEC: 24Vdc, 0-1.25A, 30W max.
ta: -20...+45°C tc: max. 90 °C

D-POWER 60/12R

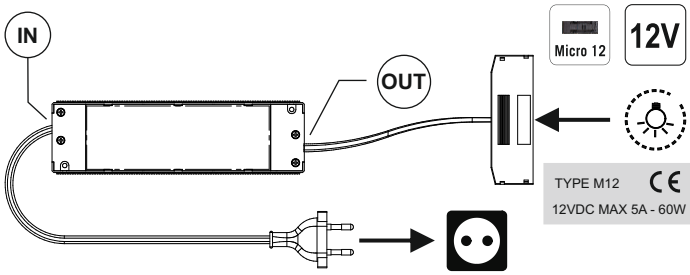

PRI: 220-240Vac, 50/60Hz, 0.3A, cos (φ) 0.95
SEC: 12Vdc, 0-5A, 60W max.
ta: -20...+45°C tc: max. 90 °C

D-POWER 60/24D

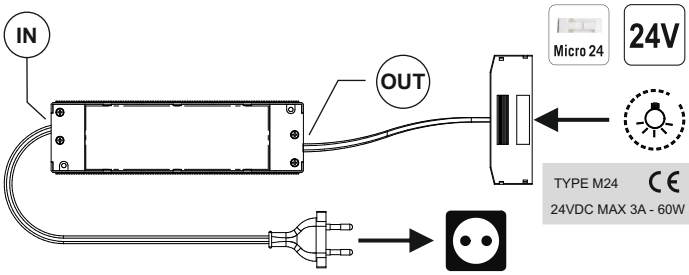

PRI: 220-240Vac, 50/60Hz, 0.3A, cos (φ) 0.95
SEC: 24Vdc, 0-2.5A, 60W max.
ta: -20...+45°C tc: max. 90 °C

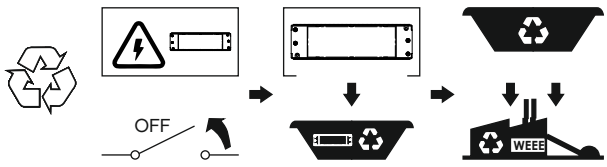

D-POWER