BLANCO

BLANCO CARENA-S HD

Safety and hygiene
BLANCO mixer taps

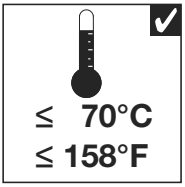

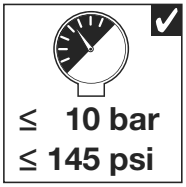

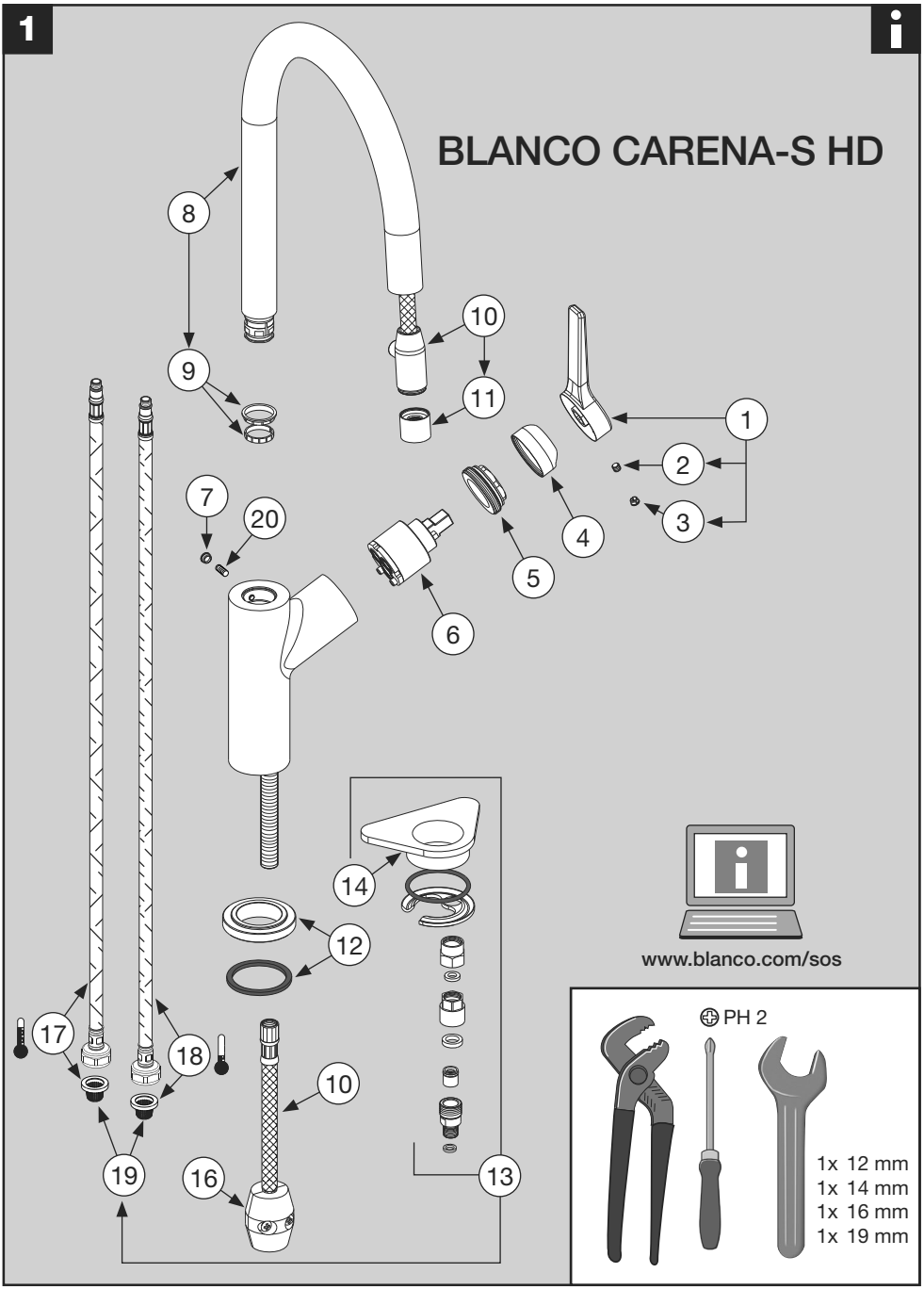
1
BLANCO CARENA-S HD
8
9
10
11
1
2
3
4
5
6
7
20
14
12
17
18
19
16
10
13
www.blanco.com/sos
PH 2
1x 12 mm
1x 14 mm
1x 16 mm
1x 19 mm

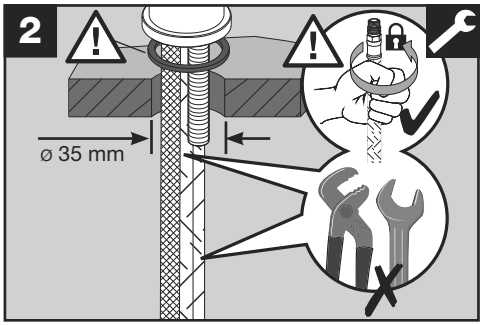
2
ø 35 mm

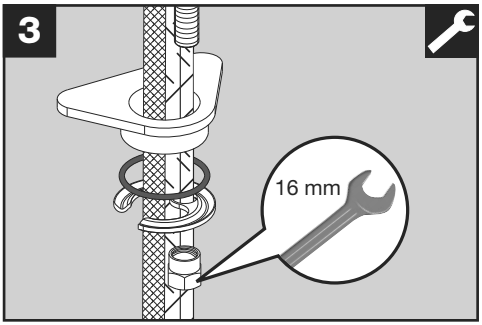
3
16 mm

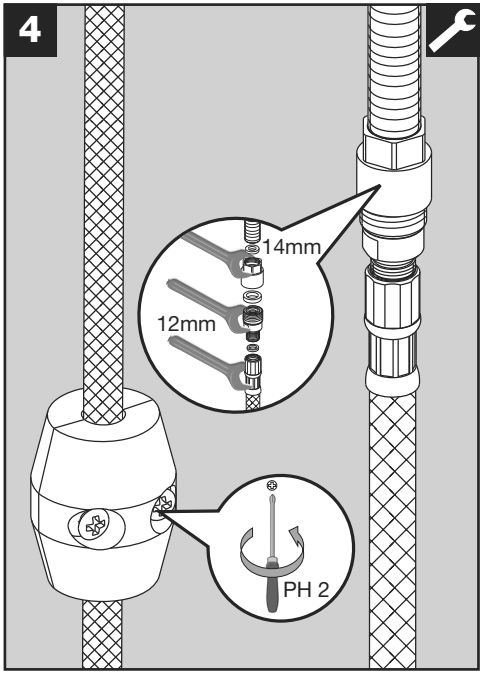
4
14mm
12mm
PH 2

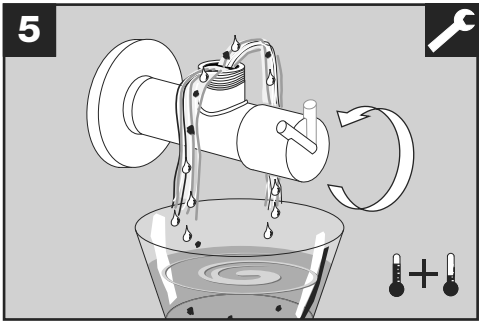
5

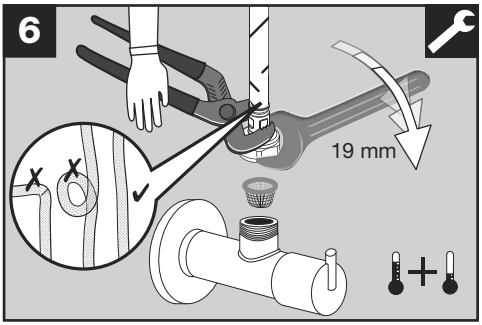
6
19 mm

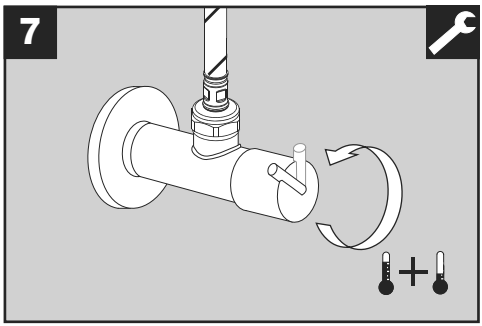
7

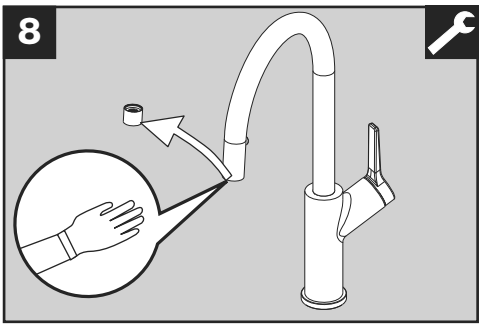
8

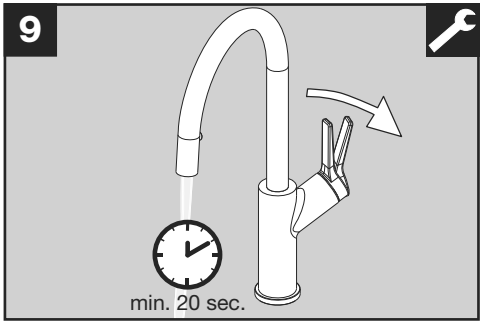
9
min. 20 sec.

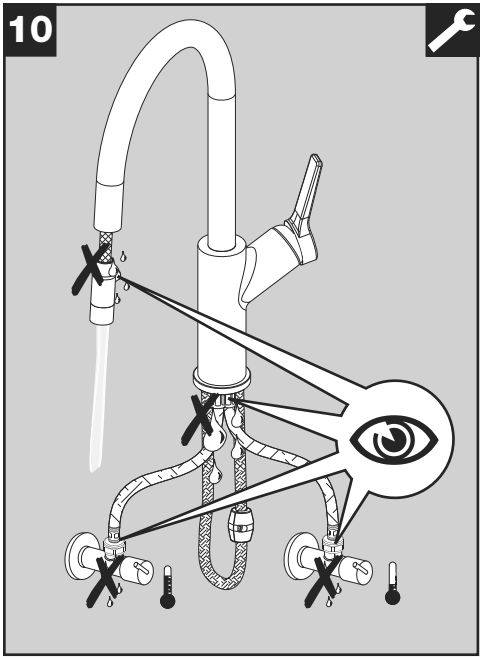
10

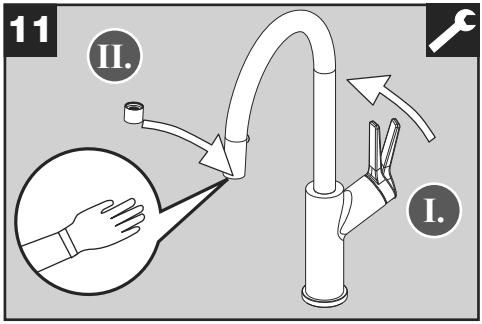
11
II.
I.

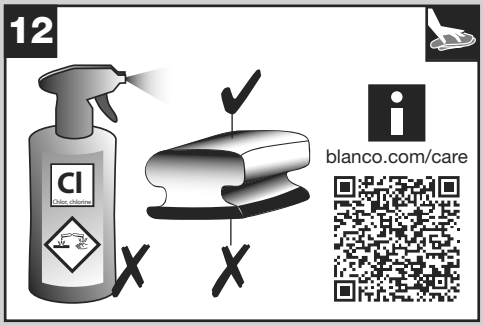
12
Cl
Chlor chlorine
blanco.com/care

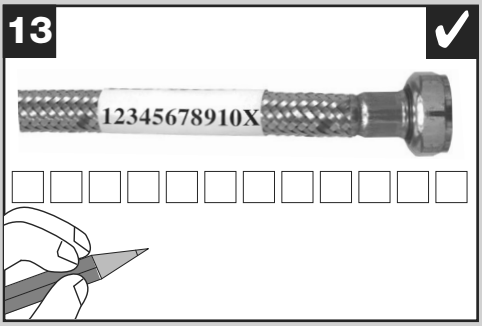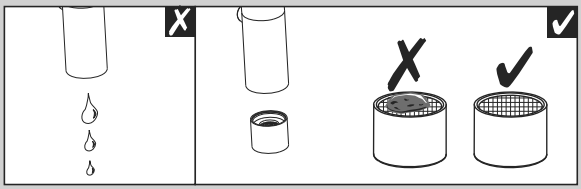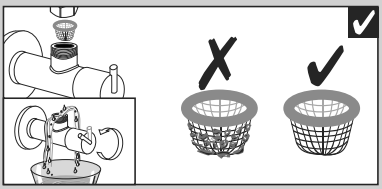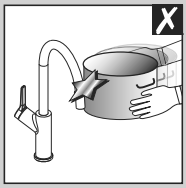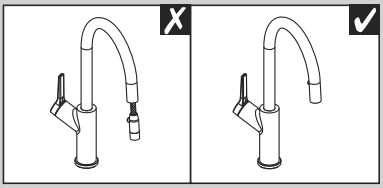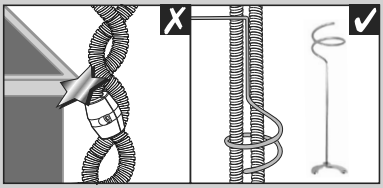
13
12345678910X